APPROVED BY: DATE INITIALS

SALES _____ _____

DEALER _____ _____

CUSTOMER _____ _____

© 2008 United Trailers

12V Dome Light	STEREO	110V Switch	Motorbase Plug	E-Track
12V Switch	3-Way 12V Switch	Interior Recept	30 AMP Electrical Box	Swivel D-Ring
12V Porch/Load Light	Stereo Speaker	3-Way Switch	50 AMP Electrical Box	HD D-Ring
Backup Light	Air Inlet/Outlet	GFI Recept	100 AMP Electrical Box	Rope Tie

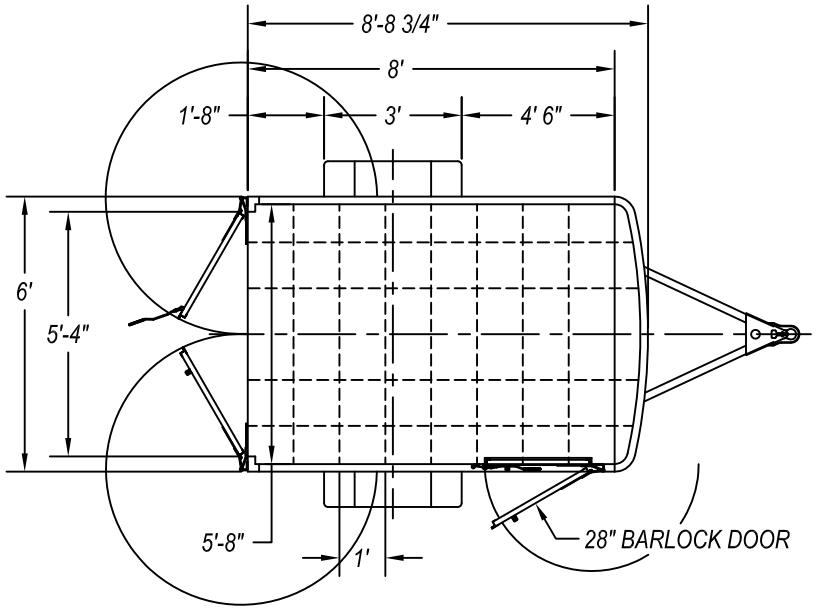

U & UEH Model Trailers 6 X 8 SA

United TRAILERS

CUSTOMER: SERIAL: ORDER:

REV. DATE: DRN BY: